Work Order ID 63884

Thursday, November 18, 2010 9:24:46 AM

Item ID: D4274-1
Revision ID: PRELIM
Item Name: Plate, Fwd Support

Accept

Setup Start
Stop

Start Date: 11/18/2010 **Start Qty:** 4.00
Required Date: 11/19/2010 **Req'd Qty:** 4.00
Reference:

Cust Item ID:
Customer:

PRELIMINARY ISSUE

Run Start
Stop

Approvals: **Process Plan:** MMF **Date:** 10-11-18 **Tooling:** _____ **Date:** _____
QC: _____ **Date:** _____ **SPC (Y/N):** _____ **Date:** _____

Sequence ID/ Work Center ID	Operation Description	Set Up/ Run Hours	Tool ID	Tool #	Plan Code	Accept Qty	Reject Qty	Reject Number	Insp. Stamp
Draw Nbr	**Revision Nbr**								
D4274	PA1								
100		0.00							
Waterjet	**Memo**	0.00				RB 10-11-18			
FLOW CNC Waterjet 304 .125	1-Cut as per Dwg Dwg Rev: PA1 Prog Rev: PA1 2-Deburr if necessary							4	
110	QC2- Inspect parts off machine FAI/FAIB	0.00							
QC Quality Control	**Memo**	0.00				RB 10-11-18			

MATERIAL CERTIFICATION
REQ'D UPON DELIVERY
CO 10/11/23

Work Order ID 63884

Thursday, November 18, 2010 9:24:46 AM

Item ID: D4274-1
Revision ID: PRELIM
Item Name: Plate, Fwd Support

Accept

Setup Start
Stop

Start Date: 11/18/2010 **Start Qty:** 4.00
Required Date: 11/19/2010 **Req'd Qty:** 4.00
Reference:

Cust Item ID:
Customer:

Run Start
Stop

Approvals: **Process Plan:** _____ **Date:** _____ **Tooling:** _____ **Date:** _____
QC: _____ **Date:** _____ **SPC (Y/N):** _____ **Date:** _____

Sequence ID/ Work Center ID	Operation Description	Set Up/ Run Hours	Tool ID	Tool #	Plan Code	Accept Qty	Reject Qty	Reject Number	Insp. Stamp
120 QC Quality Control	QC8- Inspect parts - second check	0.00							
	Memo	0.00							
130 Packaging Packaging	Identify as per dwg & Stock Location:_____	0.00							
	Memo	0.00							
140 QC Quality Control	QC21- Final Inspection - Work Order Release	0.00							
	Memo	0.00							

Disposition
-inspector to PA1 Dwg only

10.11.19

modified for test
See D4271-011 B63887PO
DEVIATIONS TO Rev A

test PA1
10.11.23

POSITIVE RECALL
EFFECTIVE _____ AUTH _____
RELEASED _____ DATE _____

10-11-20

Picklist Print

Thursday, November 18, 2010 9:24:46 AM

Work Order ID: 63884

Parent Item: D4274-1

Parent Item Name: Plate, Fwd Support

Start Date: 11/18/2010 **Required Date:** 11/19/2010

Start Qty: 4.00 **Required Qty:** 4.00

Comments: IPP rev:A 10.11.18 new issue DD verf:EC

Component Item ID/ Item Name	Replacement Item ID	Mfg/ Purch	Bin Item	Primary Location	Last Location	Route Seq ID	Unit of Measure	Qty on Hand	Qty per Kit	Total Qty	Qty Issued	Date Issued	Status
M304S11GA 304/316 0.125 Sheet		Purchased	No			100	sf	39.8523	0.357	1.503158 B10-11-18			

Location	Loc Qty	Loc Code
MAT	39.8523	
114799	39.8523	

4

114799

DART AEROSPACE LTD	Work Order:	63884
Description: PLATE FWD SUPPORT	Part Number:	D4274-1
Inspection Dwg: D4274-1 , Rev: PA1		Page 1 of 1

FIRST ARTICLE INSPECTION CHECKLIST

[X] First Article [X] Prototype

Drawing Dimension	Tolerance	Actual Dimension	Accept	Reject	Method of Inspection	Comments
Ø .257	+.006 - .001	.258	✓		✓ HB02	
Ø .191	+.005 - .001	.197	✓		✓	
Ø .129	+.005 - .001	.131	✓		✓	
2.80	+/- .030	2.801	✓		✓	
1.05	+/- .030	1.056	✓		✓	
.290	+/- .010	.288	✓		✓	
.375	+/- .010	.370	✓		✓	
.900	+/- .010	.900	✓		✓	
.75	+/- .030	.752	✓		✓	
.250	+/- .010	.250	✓		✓	
3.000	+/- .010	2.999	✓		✓	
1.500	+/- .010	1.498	✓		✓	
2.300	+/- .010	2.297	✓		✓	
1.10	+/- .030	1.090	✓		✓	
1.26	+/- .030	1.211	✓		✓	
.40	+/- .030	.400	✓		✓	
.28	+/- .030	.248	✓		✓	
1.900	+/- .010	1.897	✓		✓	
.95	+/- .030	.948	✓		✓	
.889	+/- .010	.887	✓		✓	
2.598	+/- .010	2.593	✓		✓	
.866	+/- .010	.862	✓		✓	

Measured by:	HB	Audited by:	S	Prototype Approval:	
Date:	10-11-18	Date:	10/11/18	Date:	

Inspected to PA1 Dwg only

Rev	Date	Change	Revised by	Approved
A		New Issue	KJ/JLM	

DART AEROSPACE LTD	Work Order:	63884
Description: PLATE FWD SUPPORT	Part Number:	D4274-1
Inspection Dwg: D4274-1 , Rev: PA1		Page 1 of 1

FIRST ARTICLE INSPECTION CHECKLIST

[X] First Article [X] Prototype

Drawing Dimension	Tolerance	Actual Dimension	Accept	Reject	Method of Inspection	Comments
2.660	+/- .010	2.656	X		V 1B02	
1.330	+/- .010	1.330	X		V	
4.40	+/- .030	4.410	X		V	
2.90	+/- .030	2.897	X		V	
4.10	+/- .030	4.108	X		V	
.80	+/- .030	.809	X		V	
5.70	+/- .030	5.706	X		V	
2.10	+/- .030	2.100	X		V	
1.30	+/- .030	1.307	X		V	
.380	+/- .010	.382	X		V	
.750	+/- .010	.747	X		V	
.510	+/- .010	.511	X		V	
6.86	+/- .030	6.870	X		V	
.125	+/- .010	.117	X		V	

Measured by:	AB	Audited by:	S	Prototype Approval:	
Date:	10-11-18	Date:	10/11/18	Date:	

Inspected to PA1 Dwg only

Rev	Date	Change	Revised by	Approved
A		New Issue	KJ/JLM	

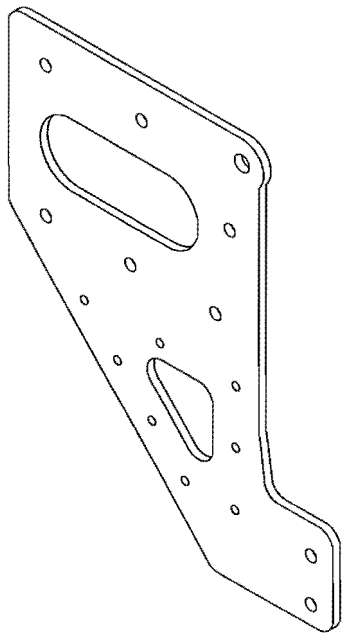

D4274-1 PLATE, FWD SUPPORT

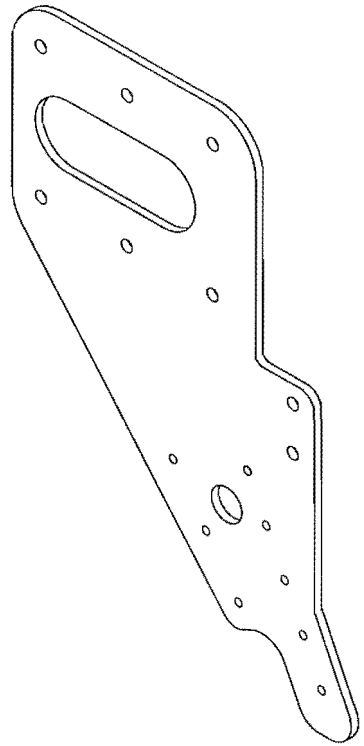

D4274-3 PLATE, AFT SUPPORT

#63884

PRELIMINARY ISSUE
Nov 17, 2010

REV.	DESCRIPTION	BY	DATE
PA1	PRELIMINARY	JPH	10.11.12

DESIGN	JPH	**DART AEROSPACE LTD** HAWKESBURY, ONTARIO, CANADA
DRAWN	JPH	
CHECKED		DRAWING NO. D4274 — REV. PA1 — SHEET 1 OF 3
MFG. APPR.		
APPROVED		TITLE: PLATES, BASKET SUPPORT — SCALE: NTS
DE APPR.		
DATE	10.11.12	

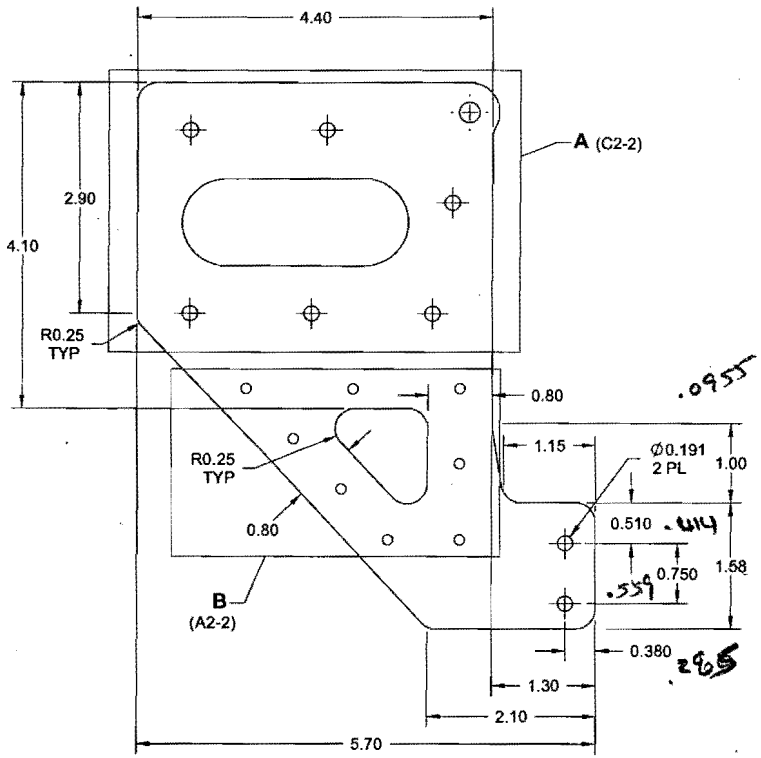

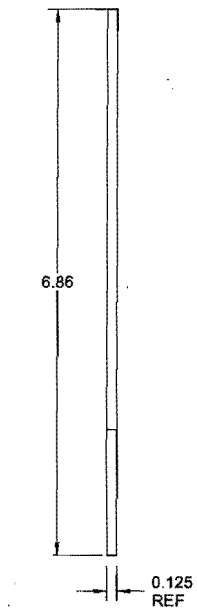

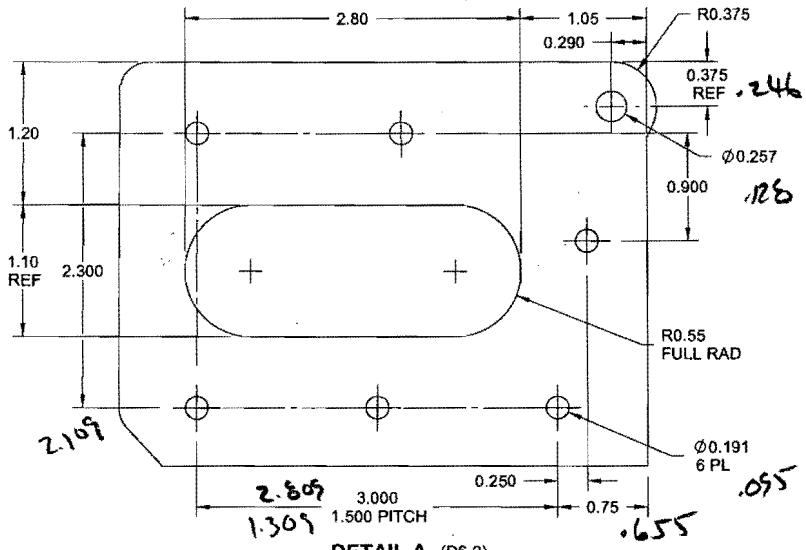

DETAIL A (D6-2)

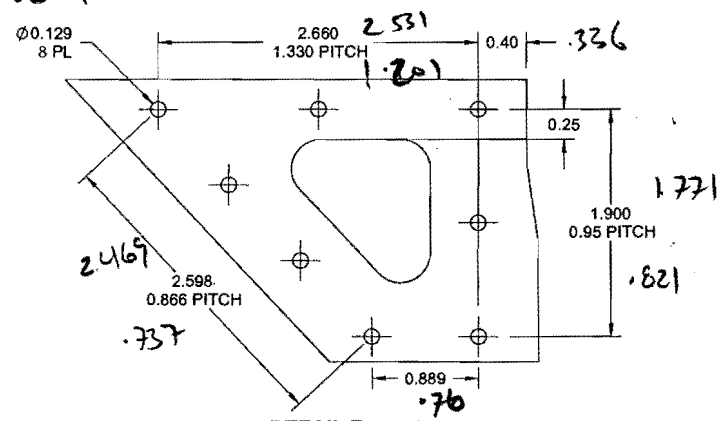

DETAIL B (B7-2)

D4274-1 PLATE, FWD SUPPORT

NOTES:
1) MATERIAL: 303/304/316 STAINLESS STEEL SHEET ANNEALED 2B, 0.125 THK
PER MIL-S-5059 OR AMS 5513/5524 OR ASTM A240 OR ASME SA240
REF DART SPEC M304S11GA OR M303S11GA
2) FINISH: NONE
3) TOLERANCES: PER DART QSI 018 UNLESS OTHERWISE NOTED
4) UNITS: INCHES UNLESS OTHERWISE NOTED
5) BREAK SHARP EDGES: 0.005 TO 0.010 MAX
6) IDENTIFICATION: N/A
7) WEIGHT: 0.76 lbs

PRELIMINARY ISSUE
Nov 17, 2010

DESIGN	JPH	DART AEROSPACE LTD HAWKESBURY, ONTARIO, CANADA
DRAWN	JPH	
CHECKED		DRAWING NO. D4274 — REV. PA1 — SHEET 2 OF 3
MFG. APPR.		
APPROVED		TITLE: PLATES, BASKET SUPPORT — SCALE: NTS
DE APPR.		
DATE	10.11.12	

Receiving Report

Date: 10/5/31 Batch No: M114799

Supplier: MAGNA Dart P/O: 11923

Packing Slip: Yes ✓ No ___
Invoice: Yes ___ No ✓
Receipt: Cash ___ Cr ✓

Release Note Attached: Yes ✓ No ___ N/A ___
Waybill Attached: Yes ___ No ✓
Shipment Complete: Yes ✓ No ___ N/A ___
QC6 Inspection ✓ N/A ___
Work Order 10/05/31 N/A ✓

Discrepancies

Part Number	Description	Quantity Ordered	Quantity Received	Quantity Returned	Quantity Short	Comments

Initials of receiver (if shipment OK) Level 12

Production/Admin:
Date 10/5/31
Received/Costing
Initial

Location ___

H:\FORMS\Purchasing\approved purch\RECREPORT Rev D

Purchase Order Receipt Listing

May 31, 2010 8:13:15 AM

All amounts are calculated in domestic currency.

All Vendors PO ID po11973 Receipt Dates from 5/31/2010 to 5/31/2010 All Line Item Types
All Item ID/GL/WOs All Rec. Employees All Currencies
Grouped by Vendor ID

Purchase Order ID/ Curr Type	Line Nbr/ Insp Req	Project ID	Reference/ Description/ Cert Std	PO U/M / Stock U/M	Required Date Required Qty	Recv Date/ Recv Emp	Recv Qty (PO U/M)	Cost Per Unit/ Recv Value	Inspected Qty/ Rejected Qty (PO U/M)	MRB Qty/ MRB Reject Qty	Book Amt
VendorID\Vendor Name		**VC-MAG002**	**Magna Stainless**								
PO11973	1		M304S16GA	sf	5/31/2010	5/31/2010	128.0000	$5.03	0.0000	0	$643.20
CAD	No		304/316 Sheet .063 114799	sf	128.0000	DCUSER		$643.20	0.0000	0	
	2		M304S11GA	sf	5/31/2010	5/31/2010	128.0000	$10.47	0.0000	0	$1,340.16
	No		304/316 0.125 Sheet 114799	sf	128.0000	DCUSER		$1,340.16	0.0000	0	
	3		M6061T6S.050	sf	5/31/2010	5/31/2010	128.0000	$2.88	0.0000	0	$368.00
	No		6061-T6 .050 Sheet 114799	sf	128.0000	DCUSER		$368.00	0.0000	0	

Total Received Quantity:	384.0000
Total Qty to Inspect (PO U/M):	0.0000
Total Reject Quantity:	0.0000
Total Receipt Value:	$2,351.36
Total Balance Due Quantity:	0.0000

P008553

C2993

YIEH CORPORATION LIMITED

INSPECTION CERTIFICATE

CERTIFICATE NO.: YS-990165
CUSTOMER: MAGNA STAINLESS INC(DIV OF CANADIAN SPECIALTY METALS INC.)
INVOICE NO.: SSCAE40101TE9
CREDIT NUMBER: I700584
DESCRIPTION: STAINLESS STEEL SHEETS

S10/05/31 25.4 + 1.5mm = 0.059"

DATE: 12 MAR, 2010

P/L NO.	SIZE	PCS	N.W. (KG)	SPEC	HEAT NO.	REFERENCE NO.
1	0.9MM X 1219MM X 2438MM	58	1214	304-2B/PAPER	9901419TM -990 20040	YERYCA9901A-01A
2	0.9MM X 1219MM X 2438MM	58	1217	304-2B/PAPER	9901419TM -990 20040	YERYCA9901A-01AB
3	0.9MM X 1219MM X 3048MM	46	1204	304-2B/PAPER	9901419TM -990 20040	YERYCA9901A-02A
4	0.9MM X 1219MM X 3048MM	46	1205	304-2B/PAPER	9901419TM -990 20040	YERYCA9901A-02AB
5	0.9MM X 1219MM X 3657MM	46	1445	304-2B/PAPER	9901419TM -990 20040	YERYCA9901A-03A
6	1.5MM X 1219MM X 2438MM	50	1757	304-2B/PAPER	9901430YU -990 20048	YERYCA9901A-04A
7	1.5MM X 1219MM X 2438MM	50	1760	304-2B/PAPER	9901430YU -990 20048	YERYCA9901A-05A
8	1.5MM X 1219MM X 2438MM	50	1756	304-2B/PAPER	9901430YU -990 20048	YERYCA9901A-06A
9	1.5MM X 1219MM X 2438MM	35	1231	304-2B/PAPER	9901430YU -990 20048	YERYCA9901A-06AB
10	2.5MM X 1219MM X 3048MM	16	1168	304-2B/PAPER	9902069YU -990 20188	YERYCA9901A-07A

	Chemical Composition										Mechanical Test			
P/L NO.	C	Si	Mn	P	S	Ni	Cr	N	Cu	Mo	Y.S.(0.2%) N/mm2	T.S. N/mm2	Elongation %	Hardness HV
1	0.041	0.300	1.300	0.029	0.001	8.000	18.09	-	-	-	281	625	56.0	157.0
2	0.041	0.300	1.300	0.029	0.001	8.000	18.09	-	-	-	281	625	56.0	157.0
3	0.041	0.300	1.300	0.029	0.001	8.000	18.09	-	-	-	281	625	56.0	157.0
4	0.041	0.300	1.300	0.029	0.001	8.000	18.09	-	-	-	281	625	56.0	157.0
5	0.041	0.300	1.300	0.029	0.001	8.000	18.09	-	-	-	281	625	56.0	157.0
6	0.044	0.530	1.190	0.036	0.001	8.020	18.27	0.0250	0.1900	0.0900	299	665	53.0	164.0
7	0.044	0.530	1.190	0.036	0.001	8.020	18.27	0.0250	0.1900	0.0900	299	665	53.0	164.0
8	0.044	0.530	1.190	0.036	0.001	8.020	18.27	0.0250	0.1900	0.0900	299	665	53.0	164.0
9	0.044	0.530	1.190	0.036	0.001	8.020	18.27	0.0250	0.1900	0.0900	299	665	53.0	164.0
10	0.052	0.540	1.160	0.039	0.005	8.020	18.20	0.0270	0.2400	0.0900	309	648	53.0	177.0

Remark: 1.We hereby certify that the products described herein have been manufactured and tested with satisfactory results in accordance with the requirement of the above material specification.
2. As per ASTM A240/480 standard.
3. The material described above has been detected with free irradiation.

YIEH CORPORATION LIMITED Q.C. MANAGER

P009433 C 1679

AK Steel

AK Steel Corporation

Metallurgical Test Report
Rockport Works
Rockport, IN 47635

Page 1

Load No. 9220693
SRN No. 9220693

CUSTOMER

SHIP TO

S 10/01/31

MILL ORDER NO. 241851-2349
PROCESSOR ORDER NO. S17824
BUYERS ORDER NO. S17824

PART NO.

ENGLISH UNITS -:PRODUCT:- METRIC UNITS
.1200 NOM 48.0000 X COIL

COIL ID	PIECE	HEAT	PARENT COIL ID	NET WEIGHT	OUTSIDE PROCESSOR ID	
212487-04EA	1	7281937	0212487-04B	13,160 LBS. 5,969 KG.	470338401	P041548
212487-04BB	1	7281937	0212487-04B	13,180 LBS. 5,978 KG.	470338402	P041549
212487-04BC	1	7281937	0212487-04B	13,150 LBS. 5,965 KG.	470338403	P041550
TOTAL COILS	TOTAL PIECES			TOTAL NET WEIGHT		
3	3			39,490 LBS. 17,912 KG.		

L-Ladle Analysis of Heat P-Product Analysis of Parent Coil

CHEMICAL ANALYSIS

ID	C	MN	P	S	SI	CR	NI	MO	N	CU
L 7281937	.022	1.491	.029	.0011	.369	18.23	8.24	.23	.0330	.38

SHIPPING DATE: 02/06/2009

REMARKS: NO INTENTIONAL ADDITIONS OF MERCURY OR MERCURY COMPOUNDS WERE MADE OR USED THROUGHOUT THE PROCESSING AND TESTING OF THIS MATERIAL
MATERIAL FREE OF RADIOACTIVE ISOTOPES
MELTED AND MANUFACTURED IN THE USA

PRODUCT DESCRIPTION

CR SHT TYPE 304/304L STAINLESS #2B FINISH SLIT EDGE * ASTM A 240 -08 * ASTM A 480 -08 EX PARA 25.1.1.3 COIL WILL BE TAGGED ON O UTSIDE ONLY * ASME SA-240 SECTION II PART A (2004 ED. 2005 ADDENDA) * ASME SA-480 SECTION II PART A (2004 ED. 2005 ADDENDA) * AS TM A 262 -02AE2 PRACTICE E * EN 10204: 2004 (E) TYPE 3.1 * ASTM A 666 -03 EX 7.1 TEST SPECIMENS WILL BE SELECTED IN THE TRANSVE RSE TEST DIRECTION IN ALL CASES * AMS 5511 H

PARENT COIL ID	POS (F/T)	DIR (L, T, D)	COND	% ELONG	TENSILE STRENGTH (KSI)	Y.S. .1% OFFSET (KSI)	ROCKWELL HARDNESS Tail	ROCKWELL HARDNESS Front
0212487-04B	T	T	A.S.T.M	52.7	92.2	49.9	B 88	B 87

*** CONTINUED ON NEXT PAGE ***

DART aerospace
Dart Aerospace Ltd.
1270 Aberdeen Street
Hawkesbury, ON K6A 1K7
Tel: 613 632 9577
Fax: 613 632 1053

PURCHASE ORDER

Purchase Order ID PO11973

Purchase Order Date 5/27/10
PO Print Date 5/27/10

Order From : VC-MAG002

MAGNA STAINLESS
5775 RUE KIERAN
ST LAURENT, QC H4S 0A3
CA

Contact Name		**Buyer**	Chantal Lavoie
Vendor Phone	800 363 6646	**Requisition Nbr**	
Vendor Fax	514 339 1105	**Tax Resale Nbr**	10127-2607
Vendor Account Nbr		**Terms**	Net 30
		Currency	CAD
		FOB	

Ship To : DART AEROSPACE LTD 1270 ABERDEEN
HAWKESBURY, ON K6A 1K7
CANADA

FAXED (27/05/2)

Line Nbr	Reference / Revision ID / Vendor Part Number	Description/ Mfg ID	Req Date/ Taxable	Req Qty/ Unit of Measure	Ship Method	Unit Price	Extended Price
1	M304S16GA	304/316 Sheet .063	5/31/10 Yes	128.00 sf	Yours ppd	$5.0250	$643.20
		Special Inst:	MATERIAL: AISI 304/316 SS SHEET ANNEALED 2B FININSH AS PER MIL-S-5059 OR AMS 5513 OR AMS 5524 OR ASTM A240 OR ASME SA240				
2	M304S11GA	304/316 0.125 Sheet	5/31/10 Yes	128.00 sf	Yours ppd	$10.4700	$1,340.16
		Special Inst:	AS ABOVE				
3	M6061T6S.050	6061-T6 .050 Sheet	5/31/10 Yes	128.00 sf	Yours ppd	$2.8750	$368.00
		Special Inst:	MATERIAL: 6061-T6/T62 ALUMINUM SHEET AS PER QQ-A-250/11 OR AMS-QQ-A-250/11 OR AMS 4025 OR AMS 4027 OR ASTM B209				

Rec'd 5/27

No substitution or deviation without consent.
Certificate of Conformity or Material Certification required when applicable

Change Nbr: 1 **Change Date:** 5/27/10

Dart Aerospace Ltd.
1270 Aberdeen Street
Hawkesbury, ON K6A 1K7
Tel: 613 632 9577
Fax: 613 632 1053

PURCHASE ORDER

Purchase Order ID PO11973

Purchase Order Date 5/27/10
PO Print Date 5/27/10

Order From : VC-MAG002

MAGNA STAINLESS
5775 RUE KIERAN
ST LAURENT, QC H4S 0A3
CA

Contact Name		**Buyer**	Chantal Lavoie
Vendor Phone	800 363 6646	**Requisition Nbr**	
Vendor Fax	514 339 1105	**Tax Resale Nbr**	10127-2607
Vendor Account Nbr		**Terms**	Net 30
		Currency	CAD
		FOB	

PO Total: **$2,351.36**

MATERIAL CERTIFICATION
REQ'D UPON DELIVERY

CZ

No substitution or deviation without consent.
Certificate of Conformity or Material Certification required when applicable

Change Nbr: 1 **Change Date:** 5/27/10

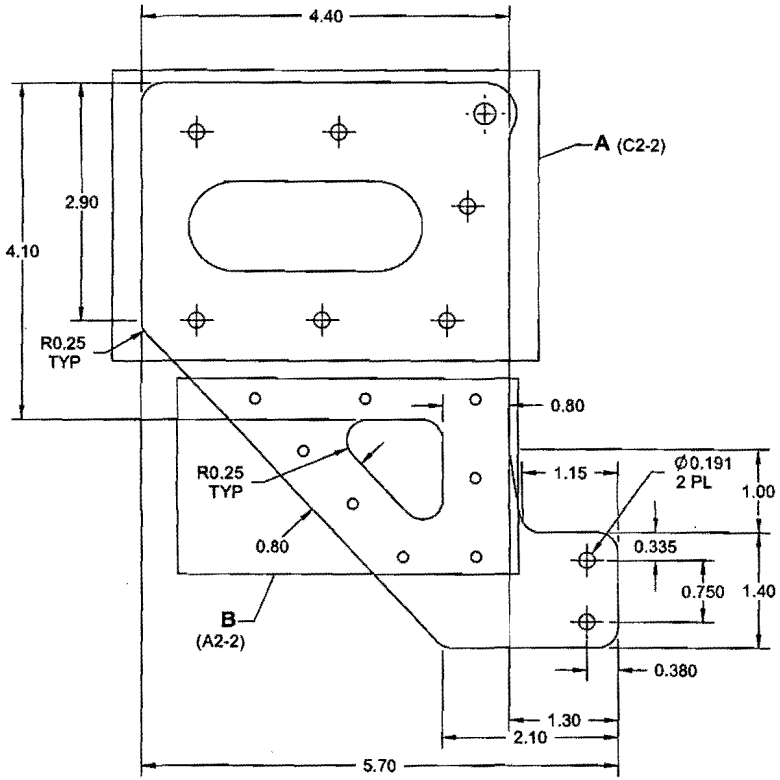

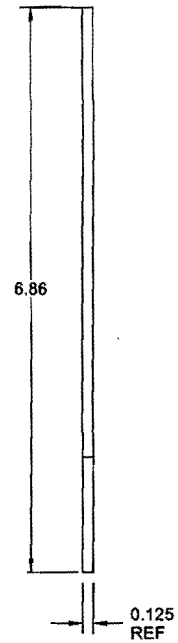

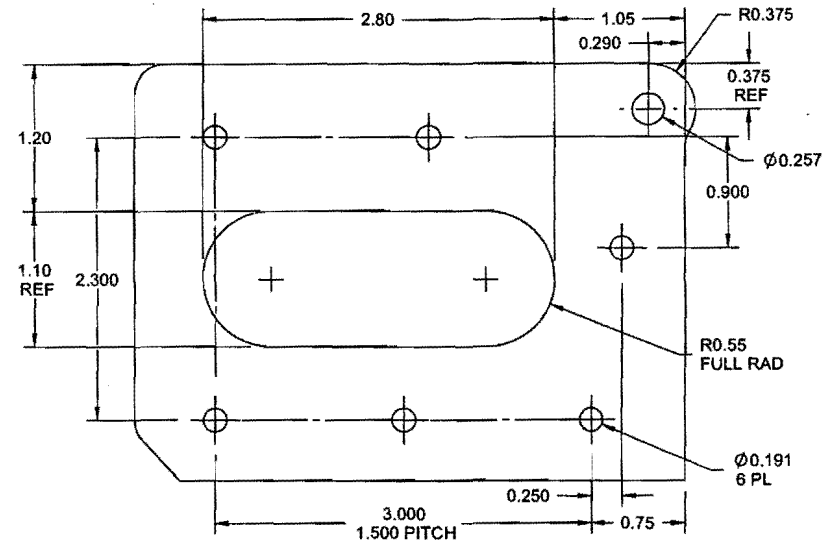

DETAIL A (D6-2)

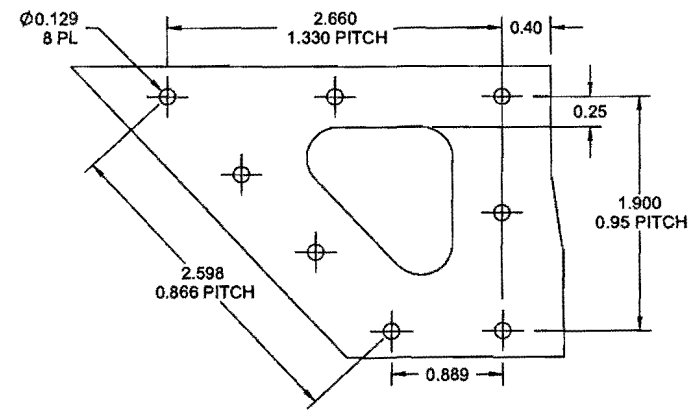

DETAIL B (B7-2)

D4274-1 PLATE, FWD SUPPORT

NOTES:
1) MATERIAL: 303/304/316 STAINLESS STEEL SHEET ANNEALED 2B, 0.125 THK
PER MIL-S-5059 OR AMS 5513/5524 OR ASTM A240 OR ASME SA240
REF DART SPEC M304S11GA OR M303S11GA
2) FINISH: NONE
3) TOLERANCES: PER DART QSI 018 UNLESS OTHERWISE NOTED
4) UNITS: INCHES UNLESS OTHERWISE NOTED
5) BREAK SHARP EDGES: 0.005 TO 0.010 MAX
6) IDENTIFICATION: N/A
7) WEIGHT: 0.75 lbs

DESIGN	JPH	**DART AEROSPACE LTD** HAWKESBURY, ONTARIO, CANADA
DRAWN	JPH	DRAWING NO. D4274 — REV. A — SHEET 2 OF 3
CHECKED		
MFG. APPR.		
APPROVED		TITLE: PLATES, BASKET SUPPORT — SCALE: NTS
DE APPR.		
DATE	10.11.25	

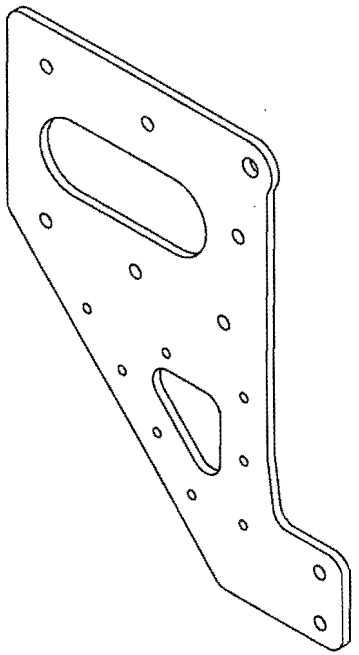

D4274-1 PLATE, FWD SUPPORT

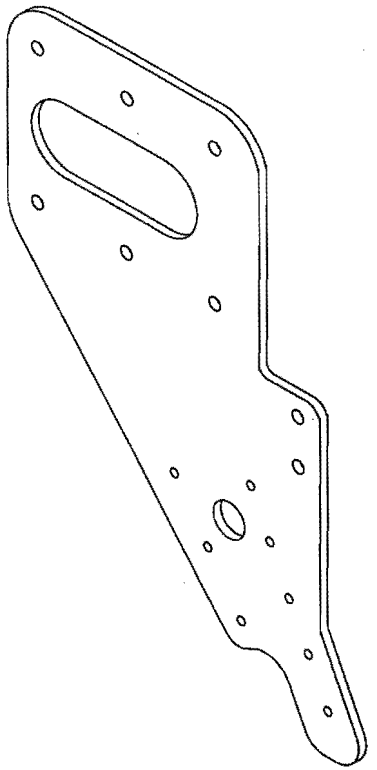

D4274-3 PLATE, AFT SUPPORT

REV.	DESCRIPTION	BY	DATE
A	NEW ISSUE	SC	10.11.25

DESIGN	JPH	**DART AEROSPACE LTD** HAWKESBURY, ONTARIO, CANADA
DRAWN	JPH	
CHECKED		DRAWING NO. D4274 — REV. A — SHEET 1 OF 3
MFG. APPR.		
APPROVED		TITLE: PLATES, BASKET SUPPORT — SCALE: NTS
DE APPR.		
DATE	10.11.25	